FEMALE CONNECTOR NPT (FRACTIONAL)

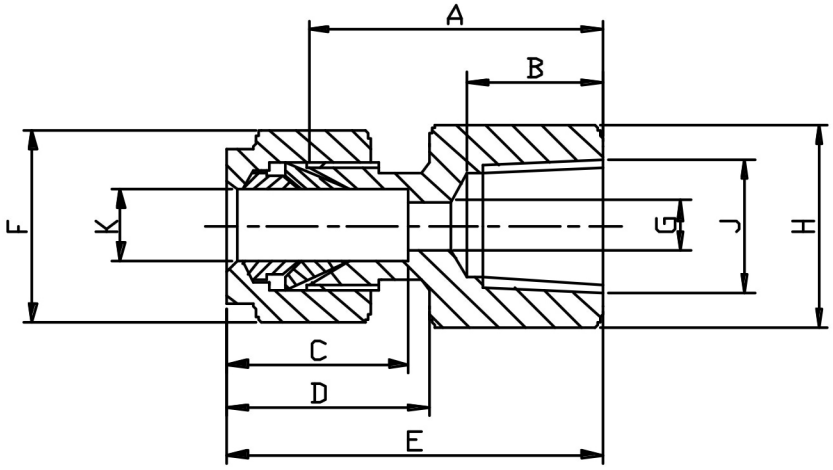

K TUBE	J THREAD	PART No	A	B	C	D	E	F HEX	G	H HEX	Kg/100
1/8	1/8	**2FC2NPT**	22.2	9.92	13.5	16.3	29.8	11.1	2.4	14.3	2.4
1/8	1/4	**2FC4NPT**	29.4	15.1	13.5	16.3	36.9	11.1	2.4	19.1	4.4
3/16	1/8	**3FC2NPT**	23.0	9.92	14.3	16.7	30.2	12.7	3.2	14.3	2.3
3/16	1/4	**3FC4NPT**	29.4	9.92	13.5	16.3	36.9	11.1	2.4	19.1	4.5
1/4	1/8	**4FC2NPT**	23.8	9.92	15.1	17.9	31.4	14.3	4.8	14.3	2.8
1/4	1/4	**4FC4NPT**	28.6	15.1	15.1	17.9	35.6	14.3	4.8	19.1	4.6
1/4	3/8	**4FC6NPT**	30.2	15.0	15.2	17.8	37.6	14.3	4.8	22.2	6.3
1/4	1/2	**4FC8NPT**	35.1	19.8	15.2	17.8	42.4	14.3	4.8	27.0	6.4
5/16	1/4	**5FC4NPT**	29.5	15.0	16.3	19.0	36.8	15.9	6.4	19.1	5.6
3/8	1/4	**6FC4NPT**	30.1	15.1	16.7	19.5	37.7	17.5	7.1	19.1	5.1
3/8	3/8	**6FC6NPT**	31.8	15.1	16.7	19.5	39.3	17.5	7.1	22.2	6.4
3/8	1/2	**6FC8NPT**	36.6	19.8	16.7	19.5	43.9	17.5	7.1	27.0	8.0
1/2	1/4	**8FC4NPT**	30.2	15.0	22.3	21.8	40.4	17.5	7.1	33.3	6.4
1/2	3/8	**8FC6NPT**	31.8	15.1	23.0	21.8	42.1	22.2	10.3	22.2	8.0
1/2	1/2	**8FC8NPT**	36.5	19.8	23.0	21.8	46.8	22.2	10.3	28.6	13.5
1/2	3/4	**8FC12NPT**	38.1	20.6	23.0	21.8	48.4	22.2	10.3	33.3	15.7
5/8	1/2	**10FC8NPT**	37.3	19.8	23.8	21.4	46.8	25.4	12.7	28.6	13.1
5/8	3/4	**10FC12NPT**	38.1	20.6	24.4	21.8	48.3	25.4	12.7	33.3	16.0
3/4	1/2	**12FC8NPT**	36.5	19.8	24.6	21.8	46.8	28.5	15.9	28.5	13.8
3/4	3/4	**12FC12NPT**	38.1	20.6	24.6	21.8	48.4	28.5	15.9	33.3	17.8
1	3/4	**16FC12NPT**	41.3	20.6	31.4	26.6	54.4	38.1	22.2	38.1	29.8
1	1	**16FC16NPT**	50.8	25.4	31.4	26.6	63.9	38.1	22.2	42.3	40.5

*316 Stainless Steel
*Fractional sizes 1/8″ to 1″
*Silver plated nuts

DIMENSIONS SUBJECT TO CHANGE, PLEASE CONTACT US IF CRITICAL