PRESS FIT TEE

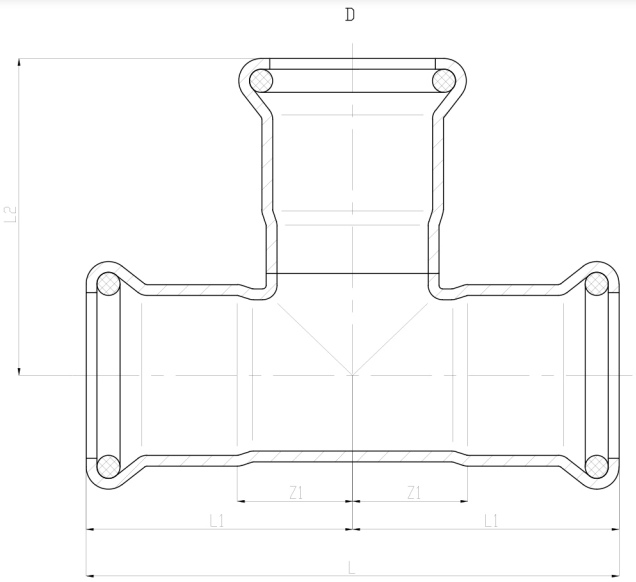

GDPRESS fittings offer reliable and consistent performance, combined with an easy installation process using common M-countour design and tooling compatability.

Each end has a toroidal seat, holding a rubber LBP (Leak before press) O-ring gasket. The fittings are installed with blue sleeves, which easily peel off after the pressing process.

All fittings are made from 316L (1.4404)
WRAS approved

SIZE	PART No	D	L	L1	L3	Z1	WEIGHT KG EACH
15	PFT15	15	66	33	38.5	13	0.065
18	PFT18	18	68	34	41	14	0.084
22	PFT22	22	74	37	44	16	0.108
28	PFT28	28	84	42	53	19	0.151
35	PFT35	35	100	53	57	27	0.194
42	PFT42	42	114	57	62	27	0.268
54	PFT54	54	138	69	76.5	34	0.389
76.1	PFT76.1	76.1	230	115	110	62	1.203
88.9	PFT88.9	88.9	260	130	128	70	1.58
108	PFT108	108	310	150	153	75	2.219

Optional Fluoropolymer (FPM) O-rings are also available which offer higher heat and chemical resistance

Application	Operating temperature	Maximum operating pressure	Seal
Hot and cold potable water	0 to 100°C	16 BAR	EPDM
Heating water	0 to 100°C	16 BAR	EPDM
Cooling water without antifreeze agent	0 to 100°C	16 BAR	EPDM
Cooling water with antifreeze agent	-30 to +120°C	16 BAR	EPDM
Service/Treated water	0 to 100°C	16 BAR	EPDM
Rainwater/Grey and black water with a pH value of >6.0	0 to 100°C	16 BAR	EPDM
Extinguishing water	0 to 70°C	16 BAR	EPDM
Extinguishing water (wet/dry, dry)	0 to 70°C	16 BAR	FPM
Sprinklers	0 to 70°C	16 BAR	EPDM
Oils, Fuels and Chemicals	Please contact	Please contact	FPM

CALL: +44 (0)121 665 3900 EMAIL: INFO@NERO.CO.UK
UNIT 2, UNION RD, ANGLO AFRICAN INDUSTRIAL ESTATE, OLDBURY, WEST MIDLANDS B69 3EX
WWW.NERO.CO.UK