MALE STUD ELBOW NPT (FRACTIONAL)

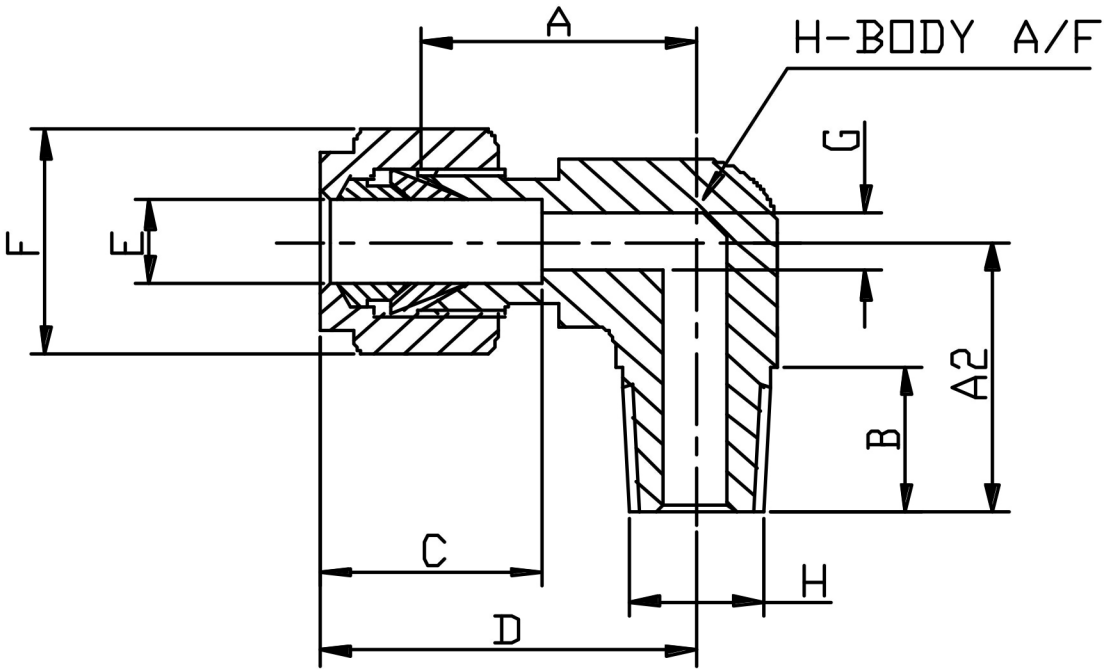

E TUBE	H THREAD	PART No	A	A2	B	C	D	F HEX	G	H A/F	Kg/100
1/8	1/8	**2ME2NPT**	19.1	19.1	9.5	13.5	28.6	11.1	2.4	12.7	2.7
3/16	1/8	**3ME2NPT**	19.8	19.1	9.5	14.3	27.8	12.7	3.2	12.7	2.8
1/4	1/8	**4ME2NPT**	20.6	19.1	9.5	15.1	28.2	14.3	4.8	12.7	2.9
1/4	1/4	**4ME4NPT**	20.6	23.8	14.3	15.1	28.2	14.3	4.8	12.7	3.4
1/4	3/8	**4ME6NPT**	22.4	26.2	14.3	15.1	29.7	14.3	4.8	17.5	5.2
1/4	1/2	**4ME8NPT**	24.4	33.0	19.1	15.1	31.8	14.3	4.8	20.6	5.9
3/8	1/4	**6ME4NPT**	23.0	25.4	14.3	16.7	30.6	17.5	7.1	14.3	5.2
3/8	3/8	**6ME6NPT**	23.0	28.6	14.3	16.7	30.6	17.5	7.1	14.3	5.9
3/8	1/2	**6ME8NPT**	25.9	33.0	19.1	16.8	33.3	17.5	7.1	20.6	7.5
1/2	1/4	**8ME4NPT**	25.9	28.2	14.2	22.9	36.1	22.2	7.1	20.6	8.9
1/2	3/8	**8ME6NPT**	25.0	27.4	14.3	23.0	35.3	22.2	8.7	17.5	9.5
1/2	1/2	**8ME8NPT**	25.0	33.3	19.1	23.0	35.3	22.2	10.3	17.5	11.2
5/8	1/2	**10ME8NPT**	27.0	34.1	19.1	23.8	36.5	25.4	11.1	23.8	12.9
3/4	1/2	**12ME8NPT**	29.8	33.3	19.1	24.6	39.7	28.6	11.1	23.8	15.1
3/4	3/4	**12ME12NPT**	29.8	36.9	19.1	24.6	39.7	28.6	15.9	23.8	18.3
1	3/4	**16ME12NPT**	35.7	42.1	19.1	31.4	48.8	38.1	15.9	31.8	30.9
1	1	**16ME16NPT**	36.83	46.5	19.1	31.2	49.0	38.1	22.4	34.9	32.5

*316 Stainless Steel
*Fractional sizes 1/8″ to 1″
*Silver plated nuts

DIMENSIONS SUBJECT TO CHANGE, PLEASE CONTACT US IF CRITICAL