BANJO TEE BSPP

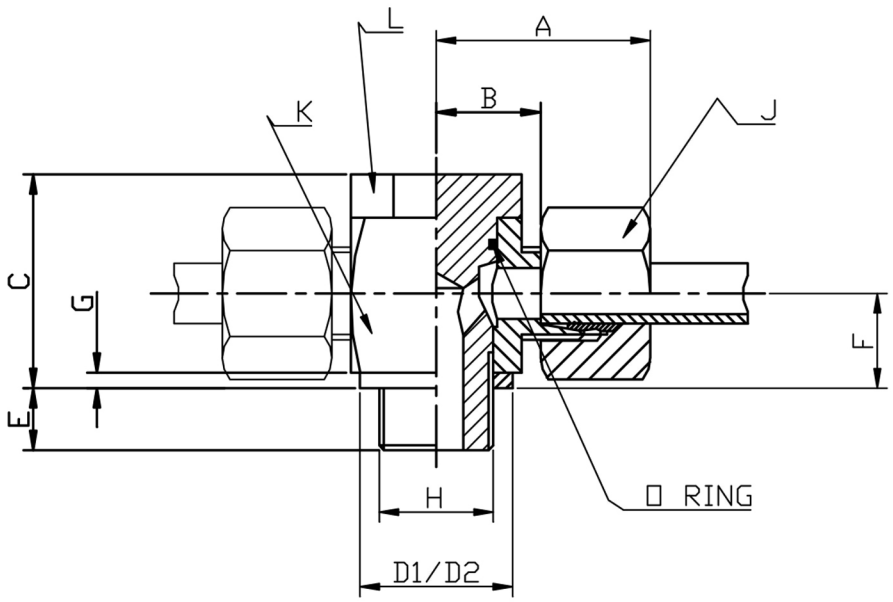

TUBE	H BSPP	PART No	A	B	C	D1	D2	E	F	G	J	K	L	PN BAR	Kg 100
LIGHT SERIES															
6	1/8	**BT06L18BSPP**	27	12.0	24	14	17	8	10.5	2.5	14	17	17		5.4
8	1/4	**BT08L14BSPP**	29	14.5	30	18	22	12	14.0	3.0	17	22	19		11.9
10	1/4	**BT10L14BSPP**	30	15.5	30	18	22	12	14.0	3.0	19	22	19	315	12.5
12	3/8	**BT12L38BSPP**	33	18.0	36	22	27	12	16.5	3.0	22	27	24		21.0
15	1/2	**BT15L12BSPP**	37	21.5	45	26	32	14	21.5	4.5	27	32	30		36.5
18	1/2	**BT18L12BSPP**	37	21.0	45	26	32	14	21.5	4.5	32	32	30		39.0
22	3/4	**BT22L34BSPP**	44	27.5	53	32	41	16	24.0	3.5	36	41	36		67.7
28	1	**BT28L1BSPP**	49	32.0	66	39	46	18	30.5	3.5	41	50	46	160	113.5
35	1-1/4	**BT35L114BSPP**	58	36.0	76	49	57	20	35.5	3.5	50	60	55		167.7
42	1-1/2	**BT42L112BSPP**	63	40.5	87	55	64	22	40.5	3.5	60	70	60		247.7
HEAVY SERIES															
6	1/4	**BT06S14BSPP**	31	16.5	30	18	22	12	14.0	3.0	17	22	19		12.7
8	1/4	**BT08S14BSPP**	31	16.5	30	18	22	12	14.0	3.0	19	22	19		13.1
10	3/8	**BT10S38BSPP**	35	18.5	36	22	27	12	16.5	3.0	22	27	24	630	22.2
12	3/8	**BT12S38BSPP**	35	18.5	36	22	27	12	16.5	3.0	24	27	24		22.8
14	1/2	**BT14S12BSPP**	40	22.5	45	26	32	14	21.5	4.5	27	32	30		38.0
16	1/2	**BT16S12BSPP**	40	22.0	45	26	32	14	21.5	4.5	30	32	30		39.9
20	3/4	**BT20S34BSPP**	48	26.5	53	32	41	16	24.0	3.5	36	41	36	400	70.3
25	1	**BT25S1BSPP**	56	31.5	66	39	46	18	30.5	3.5	46	50	46		129.2
30	1-1/4	**BT30S114BSPP**	64	37.0	76	49	57	20	35.5	3.5	50	60	55		177.7
38	1-1/2	**BT38S112BSPP**	72	41.5	87	55	64	22	40.5	3.5	60	70	60	315	294.8

*316Ti Stainless Steel
*Pressures up to 630 BAR
*Dimensions to EN ISO 8434-1/DIN 2353
*Sizes 6mm to 42mm

DIMENSIONS SUBJECT TO CHANGE, PLEASE CONTACT US IF CRITICAL